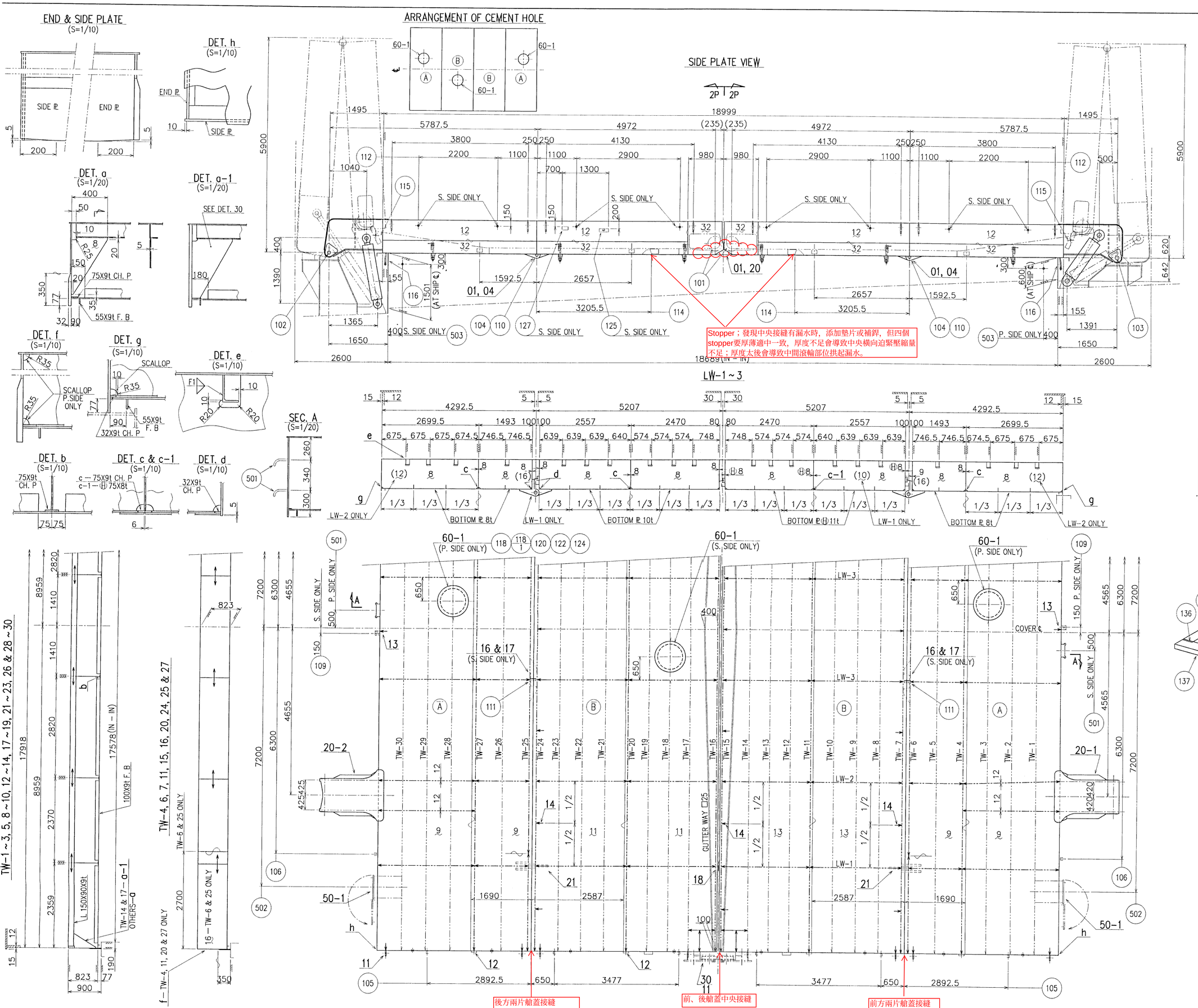

NO.	DESCRIPTION	PAGE ASS'Y	N. B.
101	WHEEL	4-1	
102	MAIN HINGE PIN	-2	
103	〃	-2	
104	INTER HINGE PIN	-3	
105	HEAVY DUTY QUICK ACTING CLEAT	-4	S-50
106	〃	-5	F-38
109	CLEAT ASSEMBLY	-8	
110	PIPING PLAN FOR GREASE NIPPLE	-9	
111	EYE PLATE	-10	
112	PLUG	-11	
114	POSITION STOPPER	-12	
115	WHEEL STOPPER	-13	
116	NON RETURN VALVE	-14	WITH COAMING
118	GRIP ASSEMBLY	-16-1/2	
118-1	NAME PLATE FOR CEMENT HOLE COVER	-16-2/2	
120	PACKING	-18	
122	BOLT & NUT		
124	〃		
125	NAME PLATE	-20	
127	CAUTION PLATE	-21	
128	RETAINER PLATE	-22	
129	〃	-23	
131	L-TYPE SPONGE RUBBER	-24	
132	L-TYPE SOLID RUBBER	-25	
133	〃	-26	
134	〃	-27	
135	SOLID RUBBER PIECE	-28	
136	DELTA RUBBER		
137	SPONGE RUBBER (50X92)		
138	SPONGE RUBBER (50X92)		
141	SPONGE RUBBER (50X120)		
501	STEP	-31	SUPPLIED BY SHIPYARD
502	VENT. HATCH	4-32	SUPPLIED BY SHIPYARD
503	GAS SAMPLING PLUG		SUPPLIED BY SHIPYARD

ARRANGEMENT OF RUBBER

EXPOSED SURFACE OF (133), (134) AND (141) TO BE COATED WITH MOLYKOTE 321R.

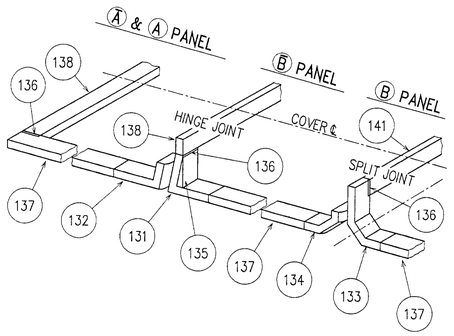

NOTE:

1) PORT & STAR' D SIDE TO BE SYMMETRICAL UNLESS OTHERWISE NOTED.
（特記以外 両舷対称のこと）

2) MARK Ⓗ SHOWN HIGHER TENSILE STEEL (B32A).
（Ⓗ印は HI-TEN材 (B32A) を示す。）

3) HATCH COVER DESIGN WEIGHT
Ⓐ PANEL --- ABT. 24.4 T
Ⓑ PANEL --- ABT. 28.2 T
Ⓑ PANEL --- ABT. 26.3 T
Ⓐ PANEL --- ABT. 24.2 T

	NO. 1H		
	HATCH NO.		QUAN.
SCALE	DESCRIPTION		MARK
1/50 (1/20) (1/10)	CONSTRUCTION AND ARRANGEMENT FOR METAL FITTINGS		
DATE		NAKATA MAC CORPORATION	